Panasonic

INSTALLATION MANUAL

URBAN MULTI AIR CONDITIONER

U-5MX3XPQ
U-8MX3XPQ(A)
U-10MX3XPQ(A)
U-12MX3XPQ(A)
U-14MX3XPQ(A)
U-16MX3XPQ(A)
U-18MX3XPQ
U-20MX3XPQ
U-22MX3XPQ
U-24MX3XPQ
U-26MX3XPQ
U-28MX3XPQ
U-30MX3XPQ
U-32MX3XPQ
U-34MX3XPQ
U-36MX3XPQ
U-38MX3XPQ
U-40MX3XPQ
U-42MX3XPQ
U-44MX3XPQ
U-46MX3XPQ
U-48MX3XPQ

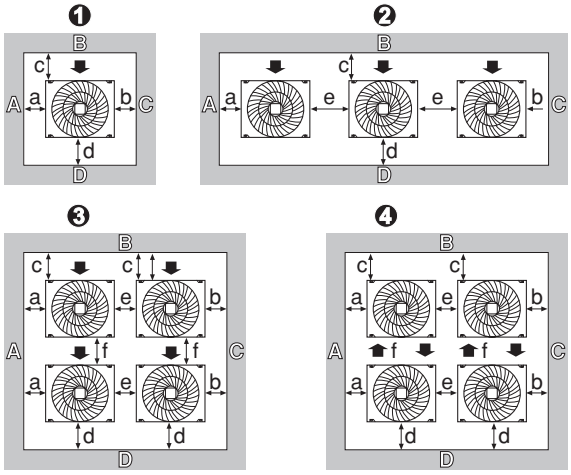

		①	②	③	④
A+B+C+D	I)*	c ≥300 mm	a ≥10 mm b ≥10 mm d ≥500 mm		c ≥500 mm a ≥10 mm b ≥10 mm d ≥500 mm
			e ≥20 mm		
				f ≥600 mm	f ≥900 mm
	II)*	c ≥100 mm	a ≥50 mm b ≥50 mm d ≥500 mm		c ≥500 mm a ≥50 mm b ≥50 mm d ≥500 mm
			e ≥100 mm		
				f ≥500 mm	f ≥600 mm
A+B	III)	a ≥200 mm c ≥300 mm			
			e ≥400 mm		

* H > 1500 mm ⇒ d ≥ d+(h_2/2)
h > 500 mm ⇒ c ≥ c+(h_1/2)

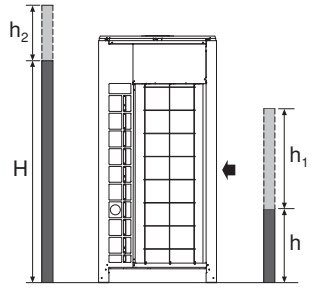

1

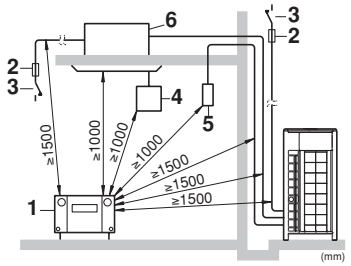

2

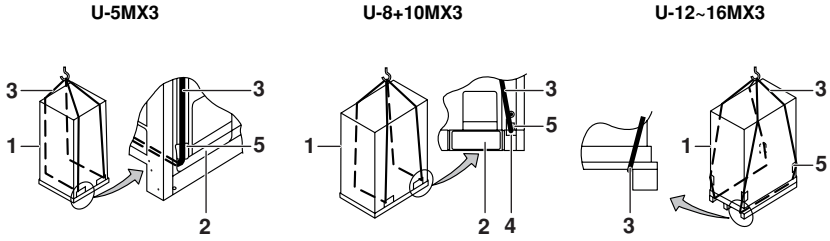

3

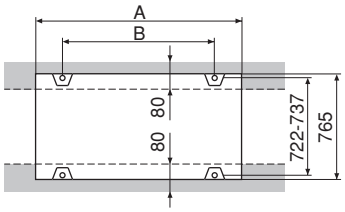

4

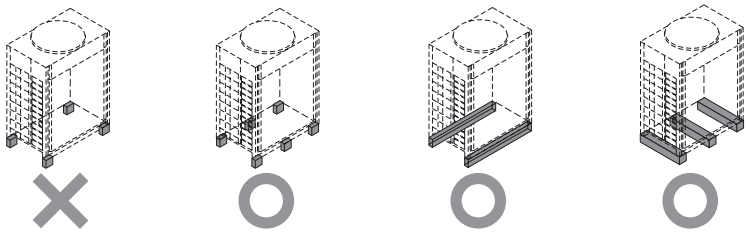

5

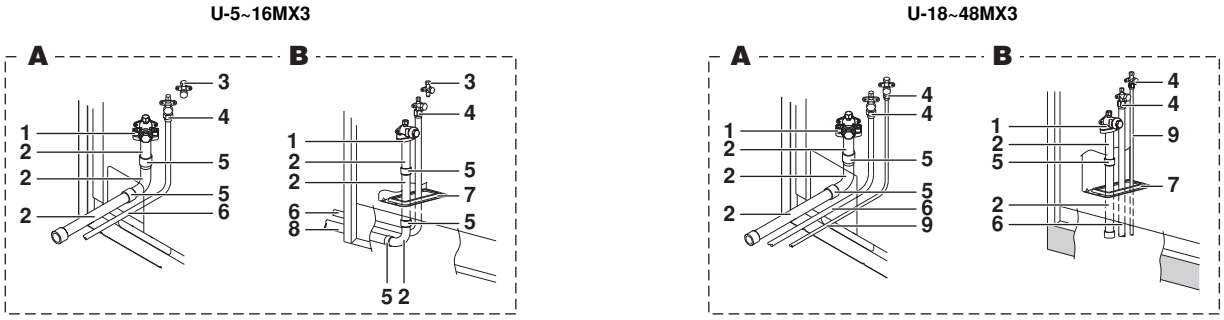

6

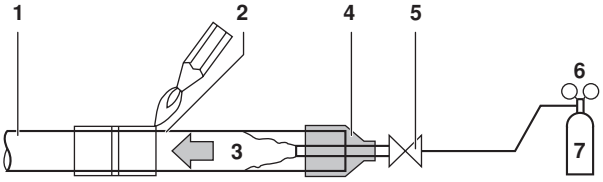

7

U-5~16MX3

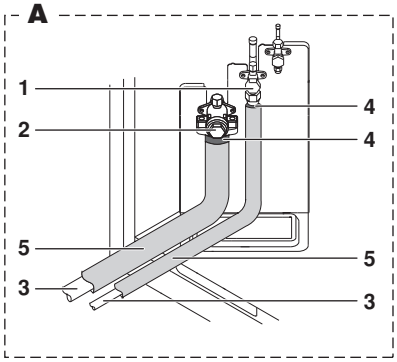

U-18~48MX3

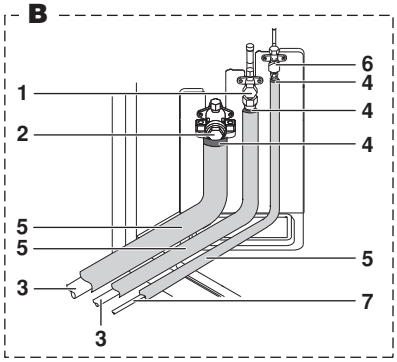

8

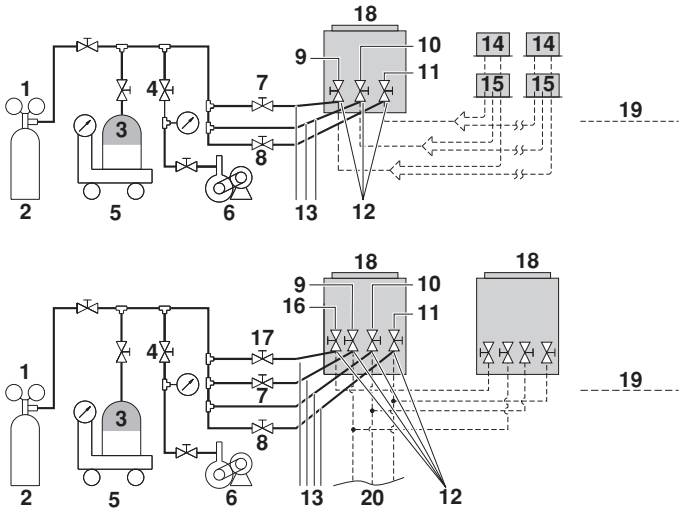

9

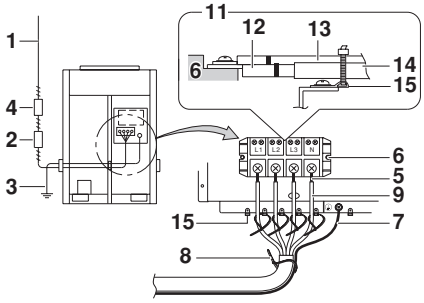

10

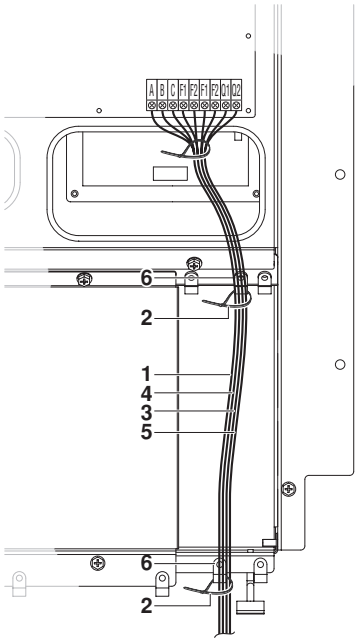

12

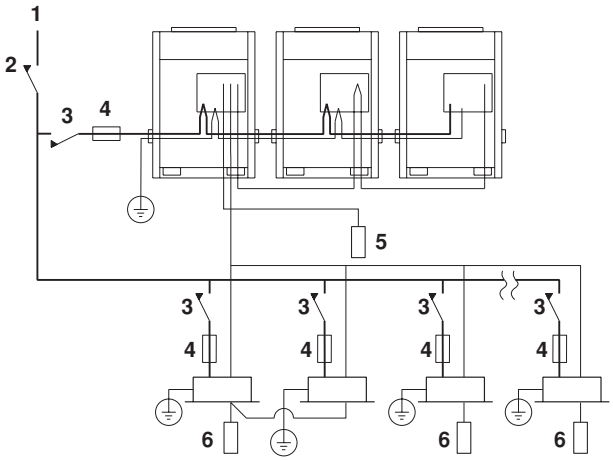

11

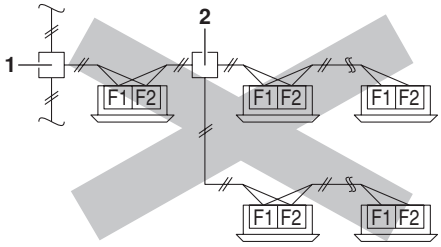

13

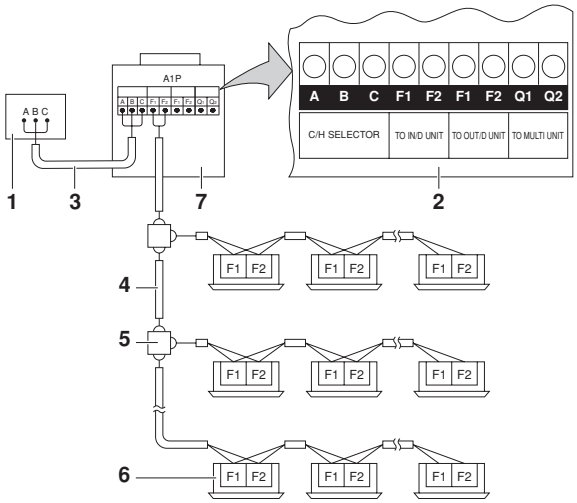

14

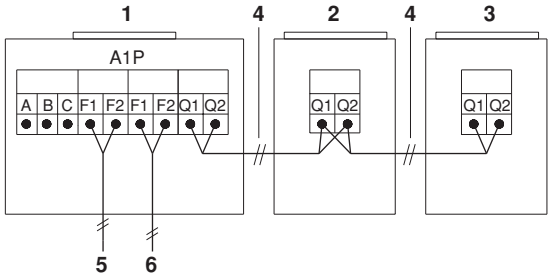

15

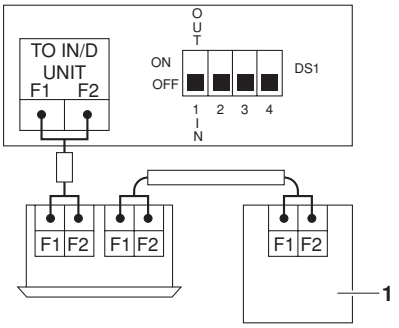

16

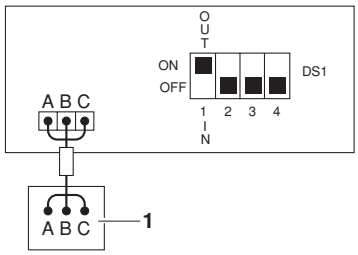

17

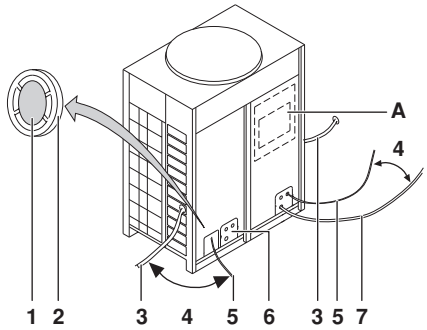

18

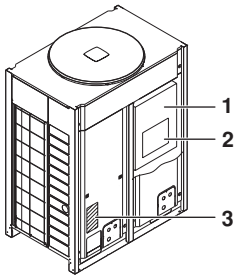

19

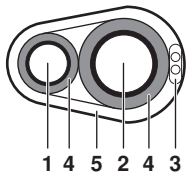

20

U-5~10MX3

U-12~16MX3

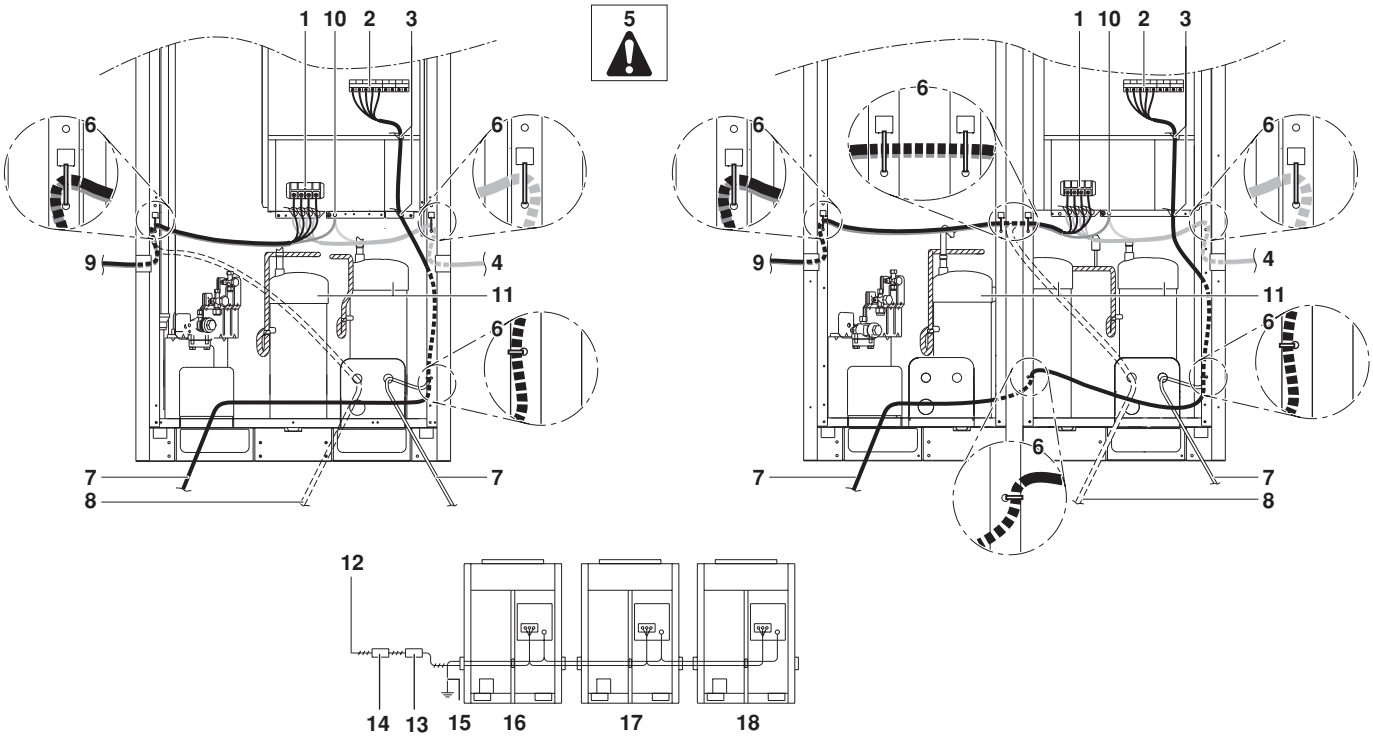

21

U-5~10MX3

U-12~16MX3

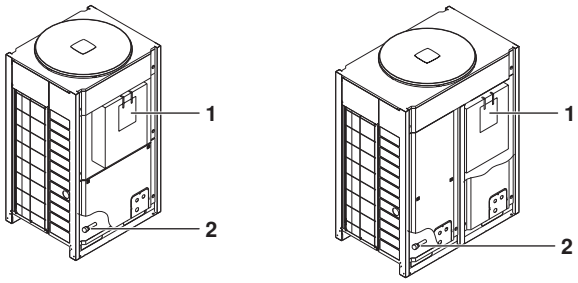

22

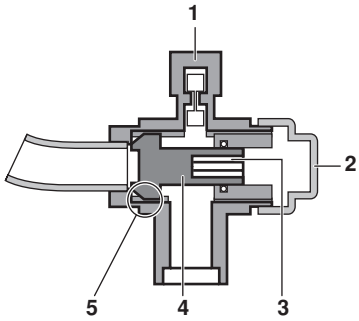

23

CONTENTS

Page

1. Introduction 1
1.1. Combination 1
1.2. Standard supplied accessories 2
1.3. Optional accessories 2
1.4. Technical and Electrical specifications 2
2. Main components 2
3. Selection of location 2
4. Inspecting and handling the unit 3
5. Unpacking and placing the unit 3
6. Refrigerant piping 4
6.1. Selection of piping material 4
6.2. Connecting the refrigerant piping 4
6.3. Example of connection 7
6.4. Leak test and vacuum drying 9
6.5. Pipe insulation 10
6.6. Additional refrigerant charge 10
7. Field wiring 11
7.1. Internal wiring – Parts table 11
7.2. Optional parts cool/heat selector 12
7.3. Power circuit and cable requirements 12
7.4. General 13
7.5. Examples 13
8. Before operation 16
8.1. Checks before initial start-up 16
8.2. Test run 16
9. Caution for refrigerant leaks 17

READ THIS MANUAL ATTENTIVELY BEFORE STARTING UP THE UNIT. DO NOT THROW IT AWAY. KEEP IT IN YOUR FILES FOR FUTURE REFERENCE.

IMPROPER INSTALLATION OR ATTACHMENT OF EQUIPMENT OR ACCESSORIES COULD RESULT IN ELECTRIC SHOCK, SHORT-CIRCUIT, LEAKS, FIRE OR OTHER DAMAGE TO THE EQUIPMENT. BE SURE ONLY TO USE ACCESSORIES MADE BY PANASONIC WHICH ARE SPECIFICALLY DESIGNED FOR USE WITH THE EQUIPMENT AND HAVE THEM INSTALLED BY A PROFESSIONAL.

IF UNSURE OF INSTALLATION PROCEDURES OR USE, ALWAYS CONTACT YOUR DEALER FOR ADVICE AND INFORMATION.

The refrigerant R-410A requires strict cautions for keeping the system clean, dry and tight.

- Clean and dry
  Foreign materials (including mineral oils such as SUNISO oil or moisture) should be prevented from getting mixed into the system.
- Tight
  R-410A does not contain any chlorine, does not destroy the ozone layer, and does not reduce the earth's protection against harmful ultraviolet radiation. R-410A can contribute slightly to the greenhouse effect if it is released. Therefore we should take special attention to check the tightness of the installation.

Read "6. Refrigerant piping" on page 4 carefully and follow these procedures correctly.

Since design pressure is 3.8 MPa or 38 bar (for R-407C units: 3.3 MPa or 33 bar), pipes of larger wall thickness may be required. Refer to paragraph "6.1. Selection of piping material" on page 4.

1. INTRODUCTION

This installation manual concerns Urban Multi units of the Panasonic MX3 series. These units are designed for outdoor installation and used for cooling and heatpump applications. The MX3 series can be combined from 6 main units and has nominal capacities ranging from 14.0 to 134 kW and nominal heating capacities ranging from 16.0 to 150 kW.

The MX3 units can be combined with Panasonic Urban Multi indoor units for air conditioning purposes, and suitable for R-410A.

The present installation manual describes the procedures for unpacking, installing and connecting the MX3 units. Installation of the indoor units is not described in this manual. Always refer to the installation manual supplied with these units for their installation.

1.1. Combination

The indoor units can be installed in the following range.

- Always use appropriate indoor units compatible with R-410A.
  To learn which models of indoor units are compatible with R-410A, refer to the product catalogs.
- Total capacity/quantity of indoor units

Outdoor unit		Total capacity of indoor units	Total quantity of indoor units
U-5MX3	(*)	62.5~162.5	8
U-8MX3	(*)	100~260	13
U-10MX3	(*)	125~325	16
U-12MX3	(*)	150~390	19
U-14MX3	(*)	175~455	20
U-16MX3	(*)	200~520	20
U-18MX3		225~585	20
U-20MX3		250~650	20
U-22MX3		275~715	22
U-24MX3		300~780	32
U-26MX3		325~845	32
U-28MX3		350~910	32
U-30MX3		375~975	32
U-32MX3		400~1040	32
U-34MX3		425~1105	34
U-36MX3		450~1170	36
U-38MX3		475~1235	38
U-40MX3		500~1300	40
U-42MX3		525~1365	40
U-44MX3		550~1430	40
U-46MX3		575~1495	40
U-48MX3		600~1560	40

(*) = main unit

1.2. Standard supplied accessories

	U-5MX3	U-8~16MX3	
Gas line piping (1)	—	1	
Gas line piping (2)	—	1	
Gas line piping (3)	—	1	
Installation manual Operation manual	1 1	1 1	
Additional refrigerant charge label	1	1	

Refer to figure 22.

1 Installation and operational manual

2 Accessory pipes

1.3. Optional accessories

To install the above outdoor units, the following optional parts are also required.

- Refrigerant branching kit (for R-410A only: Always use an appropriate kit dedicated for your system.)

Refnet header	Refnet joint
CZ-P29HK12Q	CZ-P20BK12Q
CZ-P64HK12Q	CZ-P29BK12Q
CZ-P75HK12Q	CZ-P64BK12Q
—	CZ-P75BK12Q

- Outdoor unit multi connection piping kit (For R-410A only: Always use an appropriate kit dedicated for your system.)

Number of outdoor units connected	
2	3
CZ-32PJ1PQ	CZ-48PJ1PQ

To select an optimum refrigerant branching kit, refer to "6. Refrigerant piping" on page 4.

1.4. Technical and Electrical specifications

Refer to the Engineering Data Book for the complete list of specifications.

2. Main components

For main components and function of the main components, refer to the Engineering Data Book.

3. Selection of location

This unit, both indoor and outdoor, is suitable for installation in a commercial and light industrial environment. If installed as a household appliance it could cause electromagnetic interference.

The inverter units should be installed in a location that meets the following requirements:

1 The foundation is strong enough to support the weight of the unit and the floor is flat to prevent vibration and noise generation.

2 The space around the unit is adequate for servicing and the minimum space for air inlet and air outlet is available. (Refer to figure 1 and choose one of the possibilities).

In case of an installation site where only the sides A+B have obstacles, the wall heights have no influence on any indicated service space dimensions.

A B C D Sides along the installation site with obstacles

➡ Suction side

3 There is no danger of fire due to leakage of inflammable gas.

4 Ensure that water cannot cause any damage to the location in case it drips out the unit (e.g. in case of a blocked drain pipe).

5 The piping length between the outdoor unit and the indoor unit may not exceed the allowable piping length. (Refer to "6.3. Example of connection" on page 7)

6 Select the location of the unit in such a way that neither the discharged air nor the sound generated by the unit disturb anyone.

7 Make sure that the air inlet and outlet of the unit are not positioned towards the main wind direction. Frontal wind will disturb the operation of the unit. If necessary, use a windscreen to block the wind.

8 Do not install or operate the unit on locations where air contains high levels of salt, like e.g. in the vicinity of oceans. (Refer for further information to the engineering databook).

- The equipment described in this manual may cause electronic noise generated from radio-frequency energy. The equipment complies to specifications that are designed to provide reasonable protection against such interference. However, there is no guarantee that interference will not occur in a particular installation.
  It is therefore recommended to install the equipment and electric wires keeping proper distances away from stereo equipment, personal computers, etc... (See figure 2).

  1 Personal computer or radio
  2 Fuse
  3 Earth leak detector
  4 Remote controller
  5 Cool/heat selector
  6 Indoor unit

  In extreme circumstances you should keep distances of 3 m or more and use conduit tubes for power and transmission lines.
- In heavy snowfall areas, select an installation site where snow will not affect operation of the unit.
- The refrigerant R-410A itself is nontoxic, nonflammable and is safe. If the refrigerant should leak however, its concentration may exceed the allowable limit depending on room size. Due to this it could be necessary to take measures against leakage. Refer to the chapter "9. Caution for refrigerant leaks" on page 17.
- Do not install in the following locations.
  - Locations where sulfurous acids and other corrosive gases may be present in the atmosphere.
    Copper piping and soldered joints may corrode, causing refrigerant to leak.
  - Locations where equipment that produces electro-magnetic waves is found.
    The electromagnetic waves may cause the control system to malfunction, preventing normal operation.
  - Locations where flammable gases may leak, where thinner, gasoline, and other volatile substances are handled, or where carbon dust and other incendiary substances are found in the atmosphere.
    Leaked gas may accumulate around the unit, causing an explosion.

4. Inspecting and handling the unit

At delivery, the package should be checked and any damage should be reported immediately to the carrier claims agent.

When handling the unit, take into account the following:

1 Fragile, handle the unit with care.
Keep the unit upright in order to avoid compressor damage.

2 Choose on beforehand the path along which the unit is to be brought in.

3 Lift the unit preferably with a crane and 2 belts of at least 8 m long.

4 When lifting the unit with a crane, always use protectors to prevent belt damage and pay attention to the position of the unit's centre of gravity.

5 Bring the unit as close to its final installation position in its original package to prevent damage during transport. (See figure 3)

1 Packaging material
2 Opening (large)
3 Belt sling
4 Opening (small)(40x30)
5 Protector

5. Unpacking and placing the unit

- Remove the four screws fixing the unit to the pallet.
- Make sure the unit is installed level on a sufficiently strong base to prevent vibration and noise.
- Fasten the unit in place using four anchor bolts M12.
- Make sure the base under the unit is extended more than 765 mm behind the unit.
- The unit must be installed on a solid longitudinal foundation (steelbeam frame or concrete) as indicated in figure 4.

Model	A	B
U-5MX3	635	497
U-8+10MX3	930	792
U-12~16MX3	1240	1102

Do not use stands to support the corners. (See figure 5)

X Not allowed
O Allowed

- Prepare a water drainage channel around the foundation to drain waste water from around the unit.
- If the unit is to be installed on a roof, check the strength of the roof and its drainage facilities first.
- If the unit is to be installed on a frame, install the waterproofing board within a distance of 150 mm under the unit in order to prevent infiltration of water coming from under the unit.

PRECAUTION

Block all gaps in the holes for passing out piping and wiring using sealing material (field supply). (Small animals may enter the machine.)

Example: passing piping out through the front

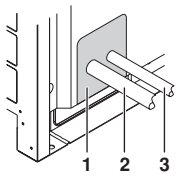

1 Plug the areas marked with "▒▒▒".
(When the piping is routed from the front panel.)
2 Gas side piping
3 Liquid side piping

6. Refrigerant piping

Use R-410A to add refrigerant.

All field piping must be installed by a licensed refrigeration technician and must comply with relevant local and national regulations.

CAUTION TO BE TAKEN WHEN BRAZING REFRIGERANT PIPING

Do not use flux when brazing copper-to-copper refrigerant piping. (Particularly for the HFC refrigerant piping) Therefore, use the phosphor copper brazing filler metal (BCuP) which does not require flux.

Flux has extremely harmful influence on refrigerant piping systems. For instance, if the chlorine based flux is used, it will cause pipe corrosion or, in particular, if the flux contains fluorine, it will damage the refrigerant oil.

Be sure to perform a nitrogen blow when brazing.
(Brazing without performing nitrogen replacement or releasing nitrogen into the piping will create large quantities of oxidized film on the inside of the pipes, adversely affecting valves and compressors in the refrigerating system and preventing normal operation.)

NOTE

Installation tools:

Make sure to use installation tools (gauge manifold charge hose, etc.) that are exclusively used for R-410A installations to withstand the pressure and to prevent foreign materials (e.g. mineral oils such as SUNISO and moisture) from mixing into the system.
(The screw specifications differ for R-410A and R-407C.)

Vacuum pump (use a 2-stage vacuum pump with a non-return valve):

- Make sure the pump oil does not flow oppositely into the system while the pump is not working.

6.1. Selection of piping material

1. Foreign materials inside pipes (including oils for fabrication) must be 30 mg/10 m or less.
2. Use the following material specification for refrigerant piping:
   - Size: determine the proper size referring to chapter "6.3. Example of connection" on page 7.
   - Construction material: phosphoric acid deoxidized seamless copper for refrigerant.
   - Temper grade: use piping with temper grade in function of the pipe diameter as listed in below table.

Pipe Ø	Temper grade of piping material
≤15.9	O
≥19.1	1/2H

O = Annealed
1/2H = Half hard

   - The pipe thickness of the refrigerant piping should comply with relevant local and national regulations. The minimal pipe thickness for R-410A piping must be in accordance with the table below.

Pipe Ø	Minimal thickness t (mm)
6.4	0.80
9.5	0.80
12.7	0.80
15.9	0.99
19.1	0.80

Pipe Ø	Minimal thickness t (mm)
22.2	0.80
28.6	0.99
34.9	1.21
41.3	1.43

3. Make sure to use the particular branches of piping that have been selected referring to chapter "6.3. Example of connection" on page 7.
4. In case the required pipe sizes (inch sizes) are not available, it is also allowed to use other diameters (mm sizes), taken the following into account:
   - select the pipe size nearest to the required size.
   - use the suitable adapters for the change-over from inch to mm pipes (field supply).

6.2. Connecting the refrigerant piping

1 Installation of refrigerant piping is possible as front connection or side connection (when taken out from the bottom) as shown in the figure.

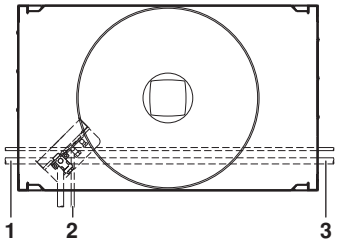

1	Left-side connection
2	Front connection
3	Right-side connection

[One outdoor unit installed: In case of U-5~16MX3]

- Front connection:
  Remove the stop valve cover to connect. (See figure 6)
- Side (bottom) connection:
  Remove the knock holes on the bottom frame and route the piping under the bottom frame. (See figure 6)

A	Front connection Remove the stop valve cover to connect.
B	Side (bottom) connection: Remove the knock holes on the bottom frame and route the piping under the bottom frame
1	Flange (or flare nut in case of models U-5MX3-type)
2	Gas side pipe (1)(2)(3) supplied with the unit. (In case of U-5MX3-type, field supply.)
3	Oil-equalizing piping stop valve (except U-5MX3 and U-8+10MX3). No piping work is needed
4	Flare nut
5	Brazing (Except U-5MX3)
6	Liquid side piping (field supply)
7	Knockout hole (use a hammer)
8	Gas side piping (field supply)
9	Oil-equalizing piping (field supply)

[When multiple outdoor units are installed: In case of U-18~48MX3]

To connect the piping between outdoor units, an optional piping kit (multi connection piping kit) is always required. When installing the piping, follow the instructions in the installation manual that comes with the kit.

- Front connection:
  Remove the stop valve cover to connect. (See figure 6)
- Side (bottom) connection:
  Remove the knock holes on the bottom frame and route the piping under the bottom frame. (See figure 6)

- Be sure to use the supplied accessory pipes when carrying out piping work in the field.
- Be sure that the field installed piping does not touch other pipes, the bottom panel or side panel. Especially for the bottom and side connection, be sure to protect the piping with suitable insulation, to prevent it from coming into contact with the casing.

Precautions when knocking out knock holes

- Be sure to avoid damaging the casing
- After knocking out the holes, we recommend you paint the edges and areas around the edges using the repair paint to prevent rusting.
- When passing electrical wiring through the knock holes, wrap the wiring with protective tape to prevent damage.

2 Make sure to perform the piping installation within the range of the maximum allowable pipe length, allowable level difference and allowable length after branching as indicated in "6.3. Example of connection" on page 7.

3 For installation of the refrigerant branching kit (Refnet), refer to the installation manual delivered with the kit.

4 Pipe connection

- Only use the flare nuts included with the unit.
  Using different flare nuts may cause the refrigerant to leak.

NOTE

The pressure regulator for the nitrogen released when doing the brazing should be set to 0.02 MPa or less. (See figure 7)

1	Refrigerant piping
2	Location to be brazed
3	Nitrogen
4	Taping
5	Manual valve
6	Regulator
7	Nitrogen

5 Protection against contamination when installing pipes

- Take measures to prevent foreign materials like moisture and contamination from mixing into the system.

	Installation period	Protection method
	More than a month	Pinch the pipe
	Less than a month	Pinch or tape the pipe
	Regardless of the period	

- Great caution is needed when passing copper tubes through walls.

Precautions when selecting branch piping.

If the overall equivalent piping length is ≥90 m, be sure to enlarge the pipe diameter of the liquid-side and gas-side main piping. (This does not apply to U-5MX3 type)

[Gas side]	
U-5MX3	Ø15.9 → Ø19.1
U-8MX3	Ø19.1 → Ø22.2
U-10MX3	Ø22.2 → Ø25.4
U-12+14MX3	Ø28.6 → Not Increased
U-16~22MX3	Ø28.6 → Ø31.8
U-24MX3	Ø34.9 → Not Increased
U-26~34MX3	Ø34.9 → Ø38.1
U-36~48MX3	Ø41.3 → Not Increased

[Liquid side]	
U-5MX3	Ø9.5 → Not Increased
U-8+10MX3	Ø9.5 → Ø12.7
U-12~16MX3	Ø12.7 → Ø15.9
U-18~24MX3	Ø15.9 → Ø19.1
U-26~48MX3	Ø19.1 → Ø22.2

If the recommended pipe size is not available, stick to the original pipe diameter (which may result in a small capacity decrease).

<Cautions for installation of multiple outdoor units>

1. The piping between the outdoor units must be routed level or slightly upward to avoid the risk of oil detention into the piping side.

Pattern 1

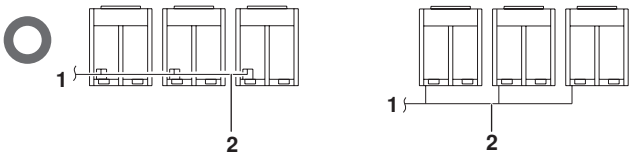

1	To indoor unit
2	Piping between outdoor units

Pattern 2

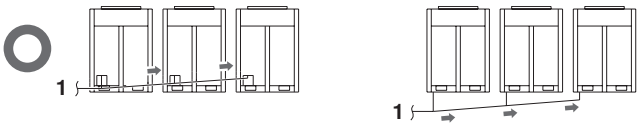

1	To indoor unit

Prohibited pattern: Change to Pattern 1 or 2

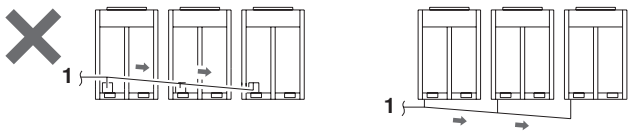

1	To indoor unit

2. To avoid the risk of oil retention to the stopping unit side, always connect the stop valve and the piping between outdoor units as shown in the figure A or figure B.

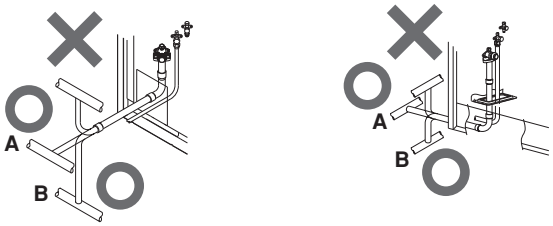

Prohibited pattern

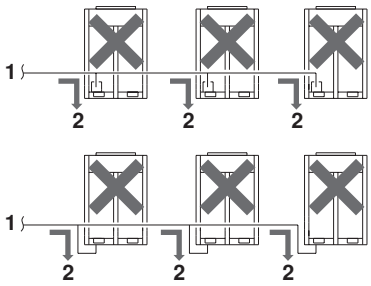

Change to pattern 1 or 2

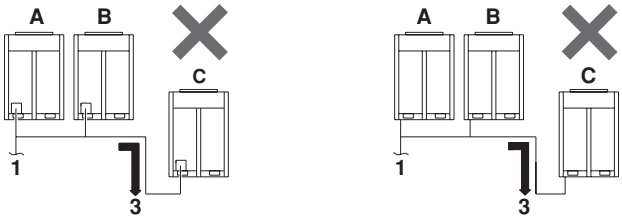

Change as shown in the figure below

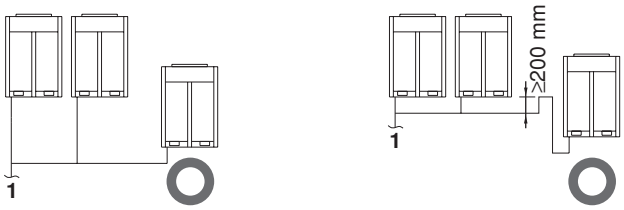

A	Unit A
B	Unit B
C	Unit C
X	Not allowed
O	Allowed
1	To indoor unit
2	Oil collects to the stopping outdoor unit.
3	Oil collects to the outdoor unit C when the system stops.

3. If the piping length between the outdoor unit-connecting pipe kits or between the outdoor units exceeds 2 m, create a rise of 200 mm or more in the gas line within a length of 2 m from the kit.

■ If ≤2 m

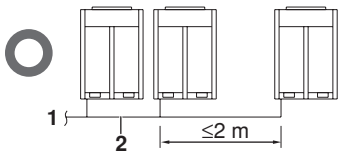

1	To indoor unit
2	Piping between outdoor units

■ If ≥2 m

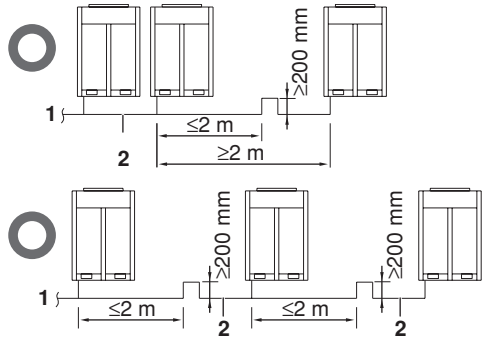

1	To indoor unit
2	Piping between outdoor units

6.3. Example of connection

Example of connection (Connection of 8 indoor units Heat pump system) 1 indoor unit line branch pipe header branch pipe (*) If the system capacity is U-18MX3 or more, re-read to the first outdoor branch as seen from the indoor unit.			**Branch with line branch pipe**	**Branch with line branch pipe and header branch pipe**	**Branch with header branch pipe**
		One outdoor unit installed (U-5~16MX3)	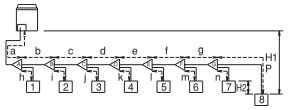	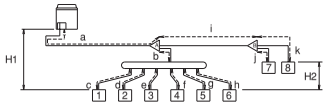	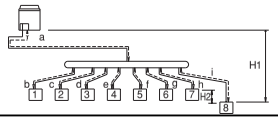
		When multiple outdoor units installed (U-18~...MX3)	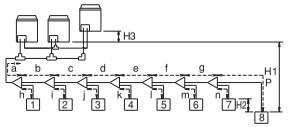	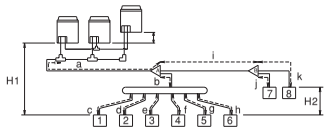	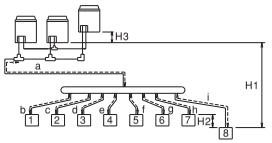
Maximum allowable length	Between outdoor and indoor units	Actual pipe length	Pipe length between outdoor and indoor units ≤150 m		
			[Example] unit 8: a+b+c+d+e+f+g+p≤150 m	[Example] unit 6: a+b+h≤150 m, unit 8: a+i+k≤150 m	[Example] unit 8: a+i≤150 m
		Equivalent length	Equivalent pipe length between outdoor and indoor units ≤175 m (Assume equivalent pipe length of line branch pipe to be 0.5 m and of the header branch pipe to be 1.0 m. (for calculation purposes))		
		Total extension length	Total piping length from outdoor unit* to all indoor units ≤300 m		
	Between outdoor branch and outdoor unit (Only for U-18MX3 or more)	Actual pipe length	Piping length from outdoor branch to outdoor unit ≤10 m. Approximately length: max. 13 m		
Allowable height	Between outdoor and indoor units	Difference in height	Difference in height between outdoor and indoor units (H1)≤50 m (≤40 m if outdoor unit is located in a lower position).		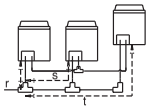 r≤10 m (Approximately length: max. 13 m) s≤10 m (Approximately length: max: 13 m) t≤10 m (Approximately length: max 13 m)
	Between indoor and indoor units	Difference in height	Difference in height between adjacent indoor units (H2)≤15 m		
	Between outdoor and outdoor units	Difference in height	Difference in height between outdoor unit (main) and outdoor unit (sub) (H3)≤5 m		
Allowable length after the branch		Actual pipe length	Pipe length from first refrigerant branch kit (either line branch pipe or header branch pipe) to indoor unit ≤40 m		
			[Example] unit 8: b+c+d+e+f+g+p≤40 m	[Example] unit 6: b+h≤40 m, unit 8: i+k≤40 m	[Example] unit 8: i≤40 m
Refrigerant branch kit selection Refrigerant branch kits can only be used with R-410A.			**How to select the line branch pipe** • When using line branch pipe at the first branch counted from the outdoor unit side. Choose from the following table in accordance with the capacity of the outdoor unit.		**How to select the header branch pipe** • Choose from the following table in accordance with the total capacity of all the indoor units connected below the header branch pipe. • Note: 250 type cannot be connected below the header branch pipe.
	Example of downstream indoor units		[Example] in case of line branch pipe C; indoor units 3+4+5+6+7+8	[Example] in case of line branch pipe B; indoor units 7+8, in case of header branch pipe; indoor units 1+2+3+4+5+6	[Example] in case of header branch pipe; indoor units 1+2+3+4+5+6+7+8

Outdoor unit capacity type	Refrigerant branch kit name
U-5MX3	CZ-P20BK12Q
U-8+10MX3	CZ-P29BK12Q
U-12~22MX3	CZ-P64BK12Q
U-24MX3	CZ-P75BK12Q

• For line branch pipes other than the first branch, select the proper branch kit model based on the total capacity index.

Indoor capacity type	Refrigerant branch kit name
<200	CZ-P20BK12Q
200≤x<290	CZ-P29BK12Q
290≤x<640	CZ-P64BK12Q
>640	CZ-P75BK12Q

Indoor capacity type	Refrigerant branch kit name
<290	CZ-P29HK12Q (Max. 8 kit)
290≤x<640	CZ-P64HK12Q (Max. 8 kit)
>640	CZ-P75HK12Q (Max. 8 kit)

How to choose an outdoor branch kit (needed if the outdoor unit capacity type is U-18MX3 or more.)

• Choose from the following table in accordance with the number of outdoor units.

Number of outdoor units	Branch kit name
2	CZ-32PJ1PQ (Max. 4 kit)
3	CZ-48PJ1PQ (Max. 8 kit)

Pipe size selection
For an outdoor unit multi installation (U-18~48MX3), make the settings in accordance with the following figure.

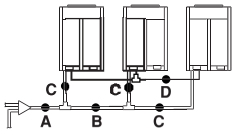

A. Piping between outdoor unit and refrigerant branch kit
- Match to the size of the connection piping on the outdoor unit.

Outdoor unit connection piping size

Outdoor unit capacity type	Piping size (outer diameter) Gas pipe	Liquid pipe
U-5MX3	Ø15.9	Ø9.5
U-8MX3	Ø19.1	
U-10MX3	Ø22.2	
U-12~16MX3	Ø28.6	Ø12.7
U-18~22MX3		Ø15.9
U-24MX3	Ø34.9	
U-26~34MX3		Ø19.1
U-36~48MX3	Ø41.3	

Piping between refrigerant branch kits
- Choose from the following table in accordance with the total capacity of all the indoor units connected below this.
- Do not let the connection piping exceed the refrigerant piping size chosen by general system model name.

Indoor capacity index	Piping size (outer diameter) Gas pipe	Liquid pipe
<200	Ø15.9	Ø9.5
200≤x<290	Ø22.2	
290≤x<420	Ø28.6	Ø12.7
420≤x<640		Ø15.9
640≤x<920	Ø34.9	Ø19.1
>920	Ø41.3	

B. Piping between outdoor branches
- Choose from the following table in accordance with the total capacity of all the oudoor units connected above this.

Outdoor capacity index	Piping size (outer diameter) Gas pipe	Liquid pipe
<22 HP	Ø28.6	Ø15.9
24 HP	Ø34.9	
>26 HP		Ø19.1

Piping between refrigerant branch kit and indoor unit
- Pipe size for direct connection to indoor unit must be the same as the connection size of indoor unit.

Indoor capacity type	Piping size (outer diameter) Gas pipe	Liquid pipe
20~50	Ø12.7	Ø6.4
63~125	Ø15.9	Ø9.5
200	Ø19.1	
250	Ø22.2	

C. Piping between outdoor branch and outdoor unit

Outdoor capacity type	Piping size (outer diameter) Gas pipe	Liquid pipe
U-8MX3	Ø19.1	Ø9.5
U-10MX3	Ø22.2	
U-12~16MX3	Ø28.6	Ø12.7

D. Oil-equalizing line (Only for U-18MX3 or greater)

Piping size	Ø6.4

How to calculate the additional refrigerant to be charged
Additional refrigerant to be charged R (kg)
R should be rounded off in units of 0.1 kg

NOTE If a negative result is gotten for R from the formula at right, no refrigerant needs to be added nor removed.

R= (Total length (m) of liquid piping size at Ø22.2) x0.35+ (Total length (m) of liquid piping size at Ø19.1) x0.25+ (Total length (m) of liquid piping size at Ø15.9) x0.17+ (Total length (m) of liquid piping size at Ø12.7) x0.11

+ (Total length (m) of liquid piping size at Ø9.5) x0.054+ (Total length (m) of liquid piping size at Ø6.4) x0.022–

Model	Amount of refrigerant
U-5~16MX3	0 kg
U-18~32MX3	3 kg
U-34~48MX3	6 kg

Example for refrigerant branch using line branch pipe and header branch pipe for U-34MX3
If the outdoor unit is U-34MX3 and the piping lengths are as below

a: Ø19.1x30 m	d: Ø9.5x10 m	g: Ø6.4x10 m	j: Ø6.4x10 m
b: Ø15.9x10 m	e: Ø9.5x10 m	h: Ø6.4x20 m	k: Ø6.4x9 m
c: Ø9.5x10 m	f: Ø9.5x10 m	i: Ø12.7x10 m	

R = [30x0.25]+[10x0.17]+[10x0.11]+[40x0.054]+[49x0.022]–6 = 7.538 ⇒ R = 7.5 kg

6.4. Leak test and vacuum drying

The units were checked for leaks by the manufacturer.

Confirm that the valves are firmly closed before pressure test or vacuuming.

Air tight test and vacuum drying

- Air tight test: Make sure to use nitrogen gas. (For the service port location, refer to the "Caution" label attached on the front panel of the outdoor unit.) (See figure 19)

  1 Electric box lid
  2 Service precautions Label location
  3 Caution Label location

  Pressurize the liquid and gas pipes (and oil equalizing pipe in case of U-18~48MX3 type) to 3.8 MPa (38 bar) (do not pressurize more than 3.8 MPa (38 bar)). If the pressure does not drop within 24 hours, the system passes the test. If the pressure drops, check where the nitrogen leaks from.

- Vacuum drying: Use a vacuum pump which can evacuate to –100.7 kPa (5 Torr, –755 mm Hg)

1. Evacuate the system from the liquid and gas pipes (and oil equalizing pipe in case of U-18~48MX3 type) by using a vacuum pump for more than 2 hours and bring the system to –100.7 kPa. After keeping the system under that condition for more than 1 hour, check if the vacuum gauge rises or not. If it rises, the system may either contain moisture inside or have leaks.
2. Following should be executed if there is a possibility of moisture remaining inside the pipe (if piping work is carried out during the raining season or over a long period of time, rainwater may enter the pipe during work).
   After evacuating the system for 2 hours, pressurize the system to 0.05 MPa (vacuum break) with nitrogen gas and evacuate the system again using the vacuum pump for 1 hour to –100.7 kPa (vacuum drying). If the system cannot be evacuated to –100.7 kPa within 2 hours, repeat the operation of vacuum break and vacuum drying.
   Then, after leaving the system in vacuum for 1 hour, confirm that the vacuum gauge does not rise.

NOTE Make sure to perform airtightness test and vacuum drying using the service ports of the stop valve shown in the table below.

U-5~16MX3	Liquid line stop valve Gas line stop valve
U-18~48MX3	Liquid line stop valve Gas line stop valve Oil-equalizing line stop valve

Stop valve operation procedure

Introduction

Confirm the sizes of the stop valves connected to the system referring to the table below.

	U-5MX3	U-8MX3	U-10MX3	U-12MX3	U-14MX3	U-16MX3
Liquid line stop valve	Ø9.5			Ø12.7		
Gas line stop valve	Ø15.9	Ø22.2(*)		Ø25.4(†)		

(*) The model U-8MX3 supports on-site piping of Ø19.1 by the accessory pipes.
(†) The model U-12~16MX3 supports on-site piping of Ø28.6 by the accessory pipes.

Opening stop valve

1. Remove the cap and turn the valve counterclockwise with the hexagon wrench.
2. Turn it until the shaft stops.
   Do not apply excessive force to the stop valve. Doing so may break the valve body, as the valve is not a backseat type. Always use the special tool.
3. Make sure to tighten the cap securely.

Closing stop valve

1. Remove the cap and turn the valve clockwise with the hexagon wrench.
2. Securely tighten the valve until the shaft contacts the main body seal.
3. Make sure to tighten the cap securely.
   For the tightening torque, refer to the table below.

Tightening torque N•m (Turn clockwise to close)						
Stop valve size	Shaft (valve body)		Cap (valve lid)	Service port	Flare nut	Gas line piping attached to unit
Ø6.4	5.4~6.6	Hexagonal wrench 4 mm	13.5~16.5	11.5~13.9	14~17	—
Ø9.5					33~39	
Ø12.7	8.1~9.9		18~22		50~60	
Ø15.9	13.5~16.5	Hexagonal wrench 6 mm	23~27		62~75	
Ø22.2	27~33	Hexagonal wrench 10 mm	36~44		—	22~28
Ø25.4						

(See figure 23)

1 Service port
2 Cap
3 Hexagon hole
4 Shaft
5 Seal

<CAUTION>

- Always use a charge hose for service port connection.
- After tightening the cap, check that no refrigerant leaks are present.

FLARE SHAPE and FLARENUT TIGHTENING TORQUE

⟨**Precautions when connecting pipes**⟩

- See the following table for flare part machining dimensions.
- When connecting the flare nuts, apply refrigerant oil to the inside and outside of the flares and turn them three or four times at first. (Use ester oil or ether oil.)

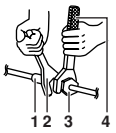

1 Piping union
2 Spanner
3 Flare nut
4 Torque wrench

- When loosening a flare nut, always use two wrenches in combination. When connecting the piping, always use a spanner and torque wrench in combination to tighten the flare nut.
- See the following table for tightening torque.
  (Applying too much torque may cause the flares to crack.)
- After all the piping has been connected, use nitrogen to perform a gas leak check.

Pipe size	Tightening Torque (N•m)	A (mm)	Flare shape
Ø9.5	32.7~39.9	12.8~13.2	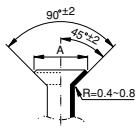
Ø12.7	49.5~60.3	16.2~16.6	
Ø15.9	61.8~75.4	19.3~19.7	

NOTE

You must use a torque wrench but if you are obliged to install the unit without a torque wrench, you may follow the installation method mentioned below.

After the work is finished, make sure to check that there is no gas leak.

When you keep on tightening the flare nut with a spanner, there is a point where the tightening torque suddenly increases. From that position, further tighten the flare nut within the angle shown below:

Pipe size	Further tightening angle	Recommended arm length of tool
Ø9.5 (3/8")	60~90°	±200 mm
Ø12.7 (1/2")	30~60°	±250 mm
Ø15,9 (5/8")	30~60°	±300 mm

6.5. Pipe insulation

After finishing the leak test and vacuum drying, the piping must be insulated. Take into account the following points:

- Make sure to insulate the connection piping and refrigerant branch kits entirely.
- Be sure to insulate liquid, and gas piping (for all units) and oil equalizing piping (only for U-18~48MX3).
- Use heat resistant polyethylene foam which can withstand a temperature of 70°C for liquid side piping and polyethylene foam which can withstand a temperature of 120°C for gas side piping.
- If you think the temperature and the relative humidity around the cooling pipes might exceed 30°C and RH 80%, reinforce the insulation of the cooling pipes (at least 20 mm thick). Condensation might be formed on the surface of the insulation.
- If there is a possibility that condensation on the stop valve might drip down into the indoor unit through gaps in the insulation and piping because the outdoor unit is located higher than the indoor unit this must be prevented by sealing up the connections. See figure 8.

A	One outdoor unit installed
B	When multiple outdoor units installed
1	Liquid line stop valve
2	Gas line stop valve
3	Indoor -outdoor interconnection piping
4	Sealing up treatment
5	Heat insulator
6	Oil-equalizing line stop valve
7	Oil-equalizing line

Be sure to insulate local pipes, as touching them can cause burns.

6.6. Additional refrigerant charge

Refrigerant cannot be charged until field wiring has been completed.

Refrigerant may only be charged after performing the leak test and the vacuum drying (see above).

When charging a system, care shall be taken that its maximum permissible charge is never exceeded, in view of the danger of liquid hammer.

Charging with an unsuitable substance may cause explosions and accidents, so always ensure that the appropriate refrigerant (R-410A) is charged.

Refrigerant containers shall be opened slowly.

Always use protective gloves and protect your eyes when charging refrigerant.

To avoid compressor breakdown. Do not charge the refrigerant more than the specified amount.

- This outdoor unit is factory charged with refrigerant and depending on pipe sizes and pipe lengths some systems require additional charging of refrigerant. (Refer to "How to calculate the additional refrigerant to be charged" on page 8).
- Make sure to use installation tools you exclusively use on R-410A installations to withstand the pressure and to prevent foreign materials from mixing into the system.
- Charge the refrigerant to the liquid pipe in its liquid state. Since R-410A is a mixed refrigerant, its composition changes if charged in a state of gas and normal system operation would no longer be assured.
- Before filling, check whether the tank has a siphon attached or not.

How to fill a tank with a siphon attached.

Fill with the tank upright.
There is a siphon tube inside,
so there is no need to turn the tank
upside-down.

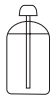

Other ways of filling the tank

Fill with the tank upside-down.

- Determine the weight of refrigerant to be charged additionally referring to the item "Additional refrigerant charge" in "How to calculate the additional refrigerant to be charged" on page 8 and fill in the amount in the "Additional refrigerant charge label" attached to the unit.
- After the vacuum drying is finished, charge the additional refrigerant in its liquid state through the liquid stop valve service port taking into account following instructions:
  - Check that gas and liquid stop valves are closed.
  - Stop the compressor and charge the specified weight of refrigerant.
- If the outdoor unit is not in operation and the total amount cannot be charged, follow the procedures for additional refrigerant charge shown below.

NOTE

Procedures for charging additional refrigerant(*)

U-5~16MX3 One outdoor unit installed (See figure 9)

1	Presssure reducing valve
2	Nitrogen
3	Tank
4	Siphon system
5	Measuring instrument
6	Vacuum pomp
7	Valve A
8	Gas side
9	Outdoor unit
10	Liquid side
11	Indoor unit
12	Stop valve service port
13	Charge hose
14	To indoor unit
15	Oil-equalizing line
16	Valve B

1 Fully open the gas line stop valve (liquid line stop valve and valve A above must be left fully closed) and start the additional refrigerant charge operation.

2 After the system is charged with a specified amount of refrigerant, press the confirmation button (BS3) on the P-board (A1P) in the outdoor unit to stop the additional refrigerant charge operation.

3 Immediately restore the stop valve to the following status. (Otherwise, the piping may burst due to liquid seal.)

Liquid line stop valve	Gas line stop valve	Oil-equalizing line stop valve
Open	Open	Close (Default status before delivery)

U-18~48MX3 When multiple outdoor unit installed (See figure 9)

1 Fully open the gas line stop valve/oil-equalizing line stop valve (liquid line stop valve and valves A and B above must be left fully closed), start the additional refrigerant charge operation.

2 After the system is charged with a specified amount of refrigerant, press the confirmation button (BS3) on the P-board (A1P) in the outdoor unit to stop the additional refrigerant charge operation.

3 Immediately restore the stop valve to the following status. (Otherwise, the piping may burst due to liquid seal.)

Liquid line stop valve	Gas line stop valve	Oil-equalizing line stop valve
Open	Open	Open

(*) **[Additional refrigerant charge procedure]**
To learn the system settings for additional refrigerant charging, refer to the [Service Precaution] label attached on the back of the electric box lid in the outdoor unit.

7. FIELD WIRING

All field wiring and components must be installed by a licensed electrician and must comply with relevant local and national regulations.

The field wiring must be carried out in accordance with the wiring diagrams and the instructions given below.

Be sure to use a dedicated power circuit. Never use a power supply shared by another appliance.

This product's reversed phase protection detector only works when the product started up.

The reversed phase protection detector is designed to stop the product in the event of an abnormalities when the product is started up.

Replace two of the three phases (L1, L2, and L3) during reverse-phase protection circuit operation.

Reversed phase detection is not performed while the product is operating.

If there exists the possibility of reversed phase after an momentary black out and the power goes on and off while the product is operating, attach a reversed phase protection circuit locally. Running the product in reversed phase can break the compressor and other parts.

7.1. Internal wiring – Parts table

Refer to the wiring diagram sticker on the unit. The abbreviations used are listed below:

A1P-A6P ..... Printed circuit board
BS1-5 ..... Push button switch (mode, set, return, wiring check, reset)
C1-4 ..... Capacitor
DS1,2 ..... Dip switch
E1HC~3HC ..... Crackcase heater
F1U ..... Fuse (250 V, 5 A, B)(A4P)
F1U,2U ..... Fuse (250 V, 10 A, B)(A1P)
F5U ..... Field fuse
H1P-8P ..... Light emitting diode (service monitor - orange)
HAP ..... Pilot lamp (service monitor - green)
K1M~3M ..... Compressor contactor (M1C~M3C)
K1R-15R ..... Magnetic relay
L1R ..... Reactor
M1C,2C,3C ..... Motor (compressor)
M1F ..... Motor (fan)
PS ..... Switching power supply
Q1RP ..... Phase reversal detect circuit
R1 ..... Resistor (current limiting)
R3-4 ..... Resistor
R10-R133 ..... Resistor (current sensor)
R1T ..... Thermistor (fin) (A2P)
R1T ..... Thermistor (air) (A1P)
R2T ..... Thermistor (suction)
R31T~33T ..... Thermistor (discharge)
R4T ..... Thermistor (coil-deicer)
R5T ..... Thermistor (coil-outlet)
R6T ..... Thermistor (liquid-pipe receiver)
R7T ..... Thermistor (oil)
S1NPH ..... Pressure sensor (high)

S1NPL.....Pressure sensor (low)
S1PH,3PH.....Pressure switch (high)
T1A.....Current sensor (A5P,A6P)
T1R .....Transformer
V1CP.....Safety devices input
V1R .....Power module (A2P,A3P)
X1M.....Terminal strip (Power supply)
X1M.....Terminal strip (control)(A1P)
Y1E,2E .....Expansion valve (electronic type)
Y1S .....Solenoid valve (hotgas bypass)
Y2S .....Solenoid valve (out-multi)
Y3S .....Solenoid valve (receiver gas intake)
Y4S .....Solenoid valve (receiver gas intake)
Y5S .....Solenoid valve (gas purge)
Y6S .....Solenoid valve (liquid pipe)
Y7S .....Solenoid valve (4 way valve)
Z1C-7C.....Noise filter (ferrite core)
Z1F.....Noise filter (with surge absorber)

.....Field wiring
L1,L2,L3 .....Live
N.....Neutral
.....Connector
.....Wire clamp
.....Protective earth (screw)
BLK .....Black
BLU .....Blue
BRN.....Brown
GRY.....Gray
ORG .....Orange
PNK.....Pink
RED.....Red
WHT .....White
YLW.....Yellow

7.2. Optional parts cool/heat selector

S1S..... Selector switch (fan, cool/heat)
S2S..... Selector switch (cool/heat)

NOTE

- Use copper conductors only.
- When using the adaptor for sequential start, refer to "7.5. Examples" on page 13.
- For connection wiring to outdoor-outdoor transmission F1-F2, outdoor-indoor transmission F1-F2, outdoor-multi transmission Q1-Q2, refer to "7.5. Examples" on page 13.
- For connection wiring to the central remote controller, refer to the installation manual of the central remote controller.
- Use insulated wire for the power cord.

7.3. Power circuit and cable requirements

A power circuit (see table below) must be provided for connection of the unit. This circuit must be protected with the required safety devices, i.e. a main switch, a slow blow fuse on each phase and an earth leak detector.

	Phase and frequency	Voltage	Recommended fuses	Transmission line section
U-5MX3	3N~50 Hz	400 V	16 A	0.75~1.25 mm^2
U-8MX3	3N~50 Hz	400 V	32 A	0.75~1.25 mm^2
U-10MX3	3N~50 Hz	400 V	32 A	0.75~1.25 mm^2
U-12MX3	3N~50 Hz	400 V	32 A	0.75~1.25 mm^2
U-14MX3	3N~50 Hz	400 V	50 A	0.75~1.25 mm^2
U-16MX3	3N~50 Hz	400 V	50 A	0.75~1.25 mm^2
U-18MX3	3N~50 Hz	400 V	63 A	0.75~1.25 mm^2
U-20MX3	3N~50 Hz	400 V	63 A	0.75~1.25 mm^2
U-22MX3	3N~50 Hz	400 V	63 A	0.75~1.25 mm^2
U-24MX3	3N~50 Hz	400 V	80 A	0.75~1.25 mm^2
U-26MX3	3N~50 Hz	400 V	80 A	0.75~1.25 mm^2
U-28MX3	3N~50 Hz	400 V	80 A	0.75~1.25 mm^2
U-30MX3	3N~50 Hz	400 V	100 A	0.75~1.25 mm^2
U-32MX3	3N~50 Hz	400 V	100 A	0.75~1.25 mm^2
U-34MX3	3N~50 Hz	400 V	100 A	0.75~1.25 mm^2
U-36MX3	3N~50 Hz	400 V	100 A	0.75~1.25 mm^2
U-38MX3	3N~50 Hz	400 V	100 A	0.75~1.25 mm^2
U-40MX3	3N~50 Hz	400 V	125 A	0.75~1.25 mm^2
U-42MX3	3N~50 Hz	400 V	125 A	0.75~1.25 mm^2
U-44MX3	3N~50 Hz	400 V	125 A	0.75~1.25 mm^2
U-46MX3	3N~50 Hz	400 V	125 A	0.75~1.25 mm^2
U-48MX3	3N~50 Hz	400 V	125 A	0.75~1.25 mm^2

When using residual current operated circuit breakers, be sure to use a high-speed type 300 mA rated residual operating current.

Be sure to install a main switch for the complete system.

NOTE

- Select the power supply cable in accordance with relevant local and national regulations.
- Wire size must comply with the applicable local and national code.
- Specifications for local wiring power cord and branch wiring are in compliance with IEC60245.
- WIRE TYPE H05VV(*)
  *Only in protected pipes (use H07RN-F when protected pipes are not used).

7.4. General

- Up to 3 units can be connected by crossover power source wiring between outdoor units. However, units of smaller capacity must be connected downstream. For details, refer to the equipment design data and technical data.
- When connecting several units in Urban Multi combination, the power supply of each outdoor unit can also be connected separately. Refer to the field wiring on the engineering data book for further details.
- Make sure to connect the power source wire to the power source terminal block and to clamp it as shown in figure 10, chapter “Field line connection”.
- As this unit is equipped with an inverter, installing a phase advancing capacitor not only will deteriorate power factor improvement effect, but also may cause capacitor abnormal heating accident due to high-frequency waves. Therefore, never install a phase advancing capacitor.
- Keep power imbalance within 2% of the supply rating.
  - Large imbalance will shorten the life of the smoothing capacitor.
  - As a protective measure, the product will stop operating and an error indication will be made, when power imbalance exceeds 4% of the supply rating.
- Follow the “electrical wiring diagram” when carrying out any electrical wiring.
- Only proceed with wiring work after blocking off all power.
- Always ground wires. (In accordance with national regulations of the pertinent country.)
- Do not connect the ground wire to gas pipes, sewage pipes, lightning rods, or telephone ground wires.
  - Combustion gas pipes: can explode or catch fire if there is a gas leak.
  - Sewage pipes: no grounding effect is possible if hard plastic piping is used.
  - Telephone ground wires and lightning rods: dangerous when struck by lightning due to abnormal rise in electrical potential in the grounding.
- This unit uses an inverter, and therefore generates noise, which will have to be reduced to avoid interfering with other devices. The outer casing of the product may take on an electrical charge due to leaked electrical current, which will have to be discharged with the grounding.
- Be sure to install an earth leak detector. (One that can handle higher harmonics.)
  (This unit uses an inverter, which means that an earth leak detector capable of handling high harmonics needs to be used in order to prevent malfunctioning of the earth leak detector itself.)
- Earth leak detector which are especially for protecting ground-faults should be used in conjunction with main switch or fuse for use with wiring.
- This unit has a negative phase protection circuit. (If it operates, only operate the unit after correcting the wiring.)

7.5. Examples

System example (See figure 11)

1	Field power supply
2	Main switch
3	Earth leak detector
4	Fuse
5	Cool/heat selector
6	Remote controller
—	Power supply wiring (sheathed cable)
—	Transmission wiring (sheathed cable)

Field line connection

L1, L2, L3, N-phase of the power cord should be clamped to the plastic bracket using field supplied clamp material.

The green and yellow striped wrapped wires should be used for grounding. (See figure 10)

1	Power supply (400 V, Three-phase)
2	Fuse
3	Grounding wire
4	Earth leak detector
5	Attach insulation sleeves
6	Power supply terminal block
7	Ground wire
8	Clamp the ground wires along with the power wires using field supplied clamps.
9	Clamp each power wire separately to the plastic brackets using field supplied clamps.
10	When wiring, do not allow the ground wires to contact the compressor lead wires. If the wires contact each other, adverse effects may occur to other units.
11	When connecting two wires to one terminal, ensure that the crimp-style terminals face with each other back to back. Moreover, make sure that the wire of the smaller gauge is located above.
12	Crimp-style terminal
13	Wire gauge: Small
14	Wire gauge: Large
15	Plastic bracket

(See figure 21)

1	Electric wiring
2	Wiring between units
3	Clamp to the electric box with field supplied clamps.
4	When routing out the power/ground wires from the right side:
5	When routing the remote control cord and inter-unit wiring, secure clearance of 50 mm or more from the power wiring. Ensure that the power wiring does not contact any heated sections (▨).
6	Clamp to the back of the column support with field supplied clamps.
7	When routing out the inter-unit wirings from the opening for piping:
8	When routing out the power/ground wires from the front:
9	When routing out the ground wires from the left side:
10	Grounding wire
11	When wiring, pay attention not to detach the acoustic insulators from the compressor.
12	Power supply
13	Fuse
14	Earth leakage breaker
15	Ground wire
16	Unit A
17	Unit B
18	Unit C

⟨**Precautions when laying power wiring**⟩

Use round pressure terminals for connections to the power terminal block.

When none are available, follow the instructions below.

- Do not connect wiring of different thicknesses to the power terminal block. (Slack in the power wiring may cause abnormal heat.)
- When connecting wiring which is the same thickness, do as shown in the figure below.

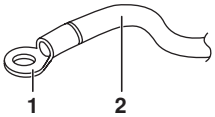

1 Round pressure terminal
2 Power wire

- For wiring, use the designated power wire and connect firmly, then secure to prevent outside pressure being exerted on the terminal board.
- Use an appropriate screwdriver for tightening the terminal screws. A screwdriver with a small head will strip the head and make proper tightening impossible.
- Over-tightening the terminal screws may break them.
- See the table below for tightening torque for the terminal screws.

Tightening torque (N•m)	
M8 (Power terminal block)	5.5~7.3
M8 (Ground)	
M3 (Inter-unit wiring terminal block)	0.8~0.97

⟨**Precautions when connecting the ground**⟩

When pulling the ground wire out, wire it so that it comes through the cut out section of the cup washer. (An improper ground connection may prevent a good ground from being achieved.)

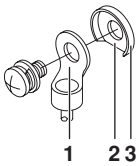

1 Round pressure terminal
2 Cut out section
3 Cup washer

Field line connection: transmission wiring and cool/heat selection

In case of U-5~16MX3 (See figure 14)

1 Cool/heat selector
2 Outdoor unit PC board (A1P)
3 Take care of the polarity
4 Use the conductor of sheathed wire (2 wire) (no polarity)
5 Terminal board (field supply)
6 Indoor unit
7 Outdoor unit

In case of U-18~48MX3 (See figure 15)

1 Unit A (Base unit)
2 Unit B
3 Unit C
4 To cooler/heater selector
5 To indoor unit
6 To outdoor unit
7 To multi unit

Fixing field line connection (See figure 12)

1 Heating/cooling switching remote control cord (when a heating/cooling switch remote control (optional) is connected)
2 Fix to the indicated plastic brackets using field supplied clamping material.
3 Wiring between the units (Outdoor – outdoor)
4 Wiring between the units (Indoor – outdoor)
5 Wiring for multi connection (only for U-18~48MX3)
6 Plastic bracket

- Be sure to follow the limits below. If the unit-to-unit cables are beyond these limits, it may result in malfunction of transmission.
  Maximum wiring length: 1000 m
  Total wiring length: 2000 m
  Maximum No. of branches: 16
- Maximum number of outdoor units connectable: 10.
- Up to 16 branches are possible for unit-to unit cabling. No branching is allowed after branching. (See figure 13)

  1 Branch
  2 Subbranching
- Never connect the power supply to unit-to-unit cabling terminal block. Otherwise the entire system may break down.

Sequential start

Make the outdoor unit cable connections shown below.

The outdoor unit PC board (A1P) is factory set at “Sequential start available”.

Setting the cool/heat operation

1 Performing cool/heat setting with the remote controller connected to the indoor unit.

Keep the cool/heat selector switch (DS1) on the outdoor unit PC board at the factory setting position IN/D UNIT. (See figure 16)

1 Remote controller

2 Performing cool/heat setting with the cool/heat selector.

Connect the cool/heat selector remote controller (optional) to the A/B/C terminals and set the cool/heat selector switch (DS1) on the outdoor unit PC board (A1P) to OUT/D UNIT. (See figure 17)

1 Cool/heat selector

For low-noise operation, it is necessary to get the optional 'External control adaptor for outdoor unit'.

For details, see the installation manual attached to the adaptor.

Picking power line and transmission line

- Be sure to let the power line and the transmission line pass through a conduit hole.
- Pick the power line from the upper hole on the left side plate, from the front position of the main unit (through the conduit hole of the wiring mounting plate) or from a knock out hole to be made in the unit's bottom plate. (See figure 18)

A	Electric wiring diagram. Printed on the back of the electric box lid.
1	Cut off the shaded zones before use.
2	Through cover
3	Power wiring between outdoor units (When the wiring is routed out through the lateral panel.)
4	Set apart
5	Transmission wire
6	Knockout hole
7	Power wiring between outdoor units (when wiring is routed through the front panel)

Precautions when knocking out knock holes

- To punch a knock hole, hit on it with a hammer.
- After knocking out the holes, we recommend you paint the edges and areas around the edges using the repair paint to prevent rusting.
- When passing electrical wiring through the knock holes, remove any burrs from the knock holes and wrap the wiring with protective tape to prevent damage.

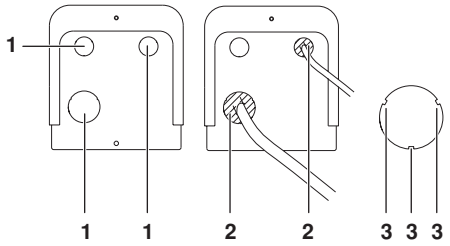

1	Knockout hole
2	If there are any possibilities that small animals enter the system through the knock holes, plug the holes with packing materials (to be prepared on-site).
3	Burr

- Use a power wire pipe for the power wiring.
- Outside the unit, make sure the weak low voltage electric wiring (i.e. for the remote control, between units, etc.) and the high voltage electric wiring do not pass near each other, keeping them at least 50 mm apart. Proximity may cause electrical interference, malfunctions, and breakage.
- Be sure to connect the power wiring to the power wiring terminal block and secure it as described under "Field line connection" on page 13.
- Inter-unit wiring should be secured as described in "Field line connection" in chapter "7.5. Examples" on page 13.
  - Secure the wiring with the accessory clamps so that it does not touch the piping.
  - Make sure the wiring and the electric box lid do not stick up above the structure, and close the cover firmly.

Never connect 400 V to the terminal block of the interconnecting wiring. Doing so will break the entire system.

- The wiring from the indoor units must be connected to the F1/F2 (In-Out) terminals on the PC board in the outdoor unit.
- After installing the interconnecting wires inside the unit, wrap them along with the on-site refrigerant pipes using finishing tape, as shown in figure 20.

1	Liquid pipe
2	Gas pipe
3	Interconnecting wiring
4	Insulator
5	Finishing tape

For the above wiring, always use vinyl cords with 0.75 to 1.25 mm^2 sheath or cables (2 core wires). (3 core wire cables are allowable for the cooler/heater changeover remote controller only.)

[In case of U-18~48MX3]

- The interconnecting wiring between the outdoor units in the same pipe line must be connected to the Q1/Q2 (Out Multi) terminals. Connecting the wires to the F1/F2 (Out-Out) terminals results in system malfunction.
- The wiring for the other lines must be connected to the F1/F2 (Out-Out) terminals of the P-board in the outdoor unit to which the interconnecting wiring for the indoor units is connected.
- The base unit is the outdoor unit to which the interconnecting wiring for the indoor units is connected.
- The interconnecting wiring between the outdoor units must be ≤30 m.
  See the paragraph "Fixing field line connection" on page 14

- Be sure to keep the power line and transmission line apart from each other.
- Be careful about polarity of the transmission line.
- Make sure that the transmission line is clamped as shown in the figure in "Field line connection" in chapter "7.5. Examples" on page 13.
- Check that wiring lines do not make contact with refrigerant piping.
- Firmly close the lid and arrange the electrical wires so as to prevent the lid or other parts from coming loose.
- When you don't use a wire conduit, be sure to protect the wires with vinyl tubes etc, to prevent the edge of the knock-out hole from cutting the wires.

8. Before operation

8.1. Checks before initial start-up

- Make sure that the circuit breaker on the power supply panel of the installation is switched off.
- Attach the power wire securely.
- Introducing power with a missing N-phase or with a mistaken N-phase will break the equipment.

After the installation, check the following before switching on the circuit breaker:

1 The position of the switches that require an initial setting

Make sure that switches are set according to your application needs before turning the power supply on.

2 Power supply wiring and transmission wiring

Use a designated power supply and transmission wiring and make sure that it has been carried out according to the instructions described in this manual, according to the wiring diagrams and according to local and national regulations.

3 Pipe sizes and pipe insulation

Make sure that correct pipe sizes are installed and that the insulation work is properly executed.

4 Additional refrigerant charge

The amount of refrigerant to be added to the unit should be written on the included “Added Refrigerant” plate and attached to the rear side of the front cover.

5 Insulation test of the main power circuit

Using a megatester for 500 V, check that the insulation resistance of 2 MΩ or more is attained by applying a voltage of 500 V DC between power terminals and earth. Never use the megatester for the transmission wiring.

6 Installation date

Be sure to keep record of the installation date on the sticker on the rear of the upper front panel according to EN60335-2-40.

8.2. Test run

After completing installation, be sure to open the valve. (Operating the unit with the valve shut will break the compressor.)

Power supply connection

When running the unit for the first time after installation, be sure to perform a test run following these steps for test run. (Not performing a test run when the unit is first installed may prevent the unit from operating properly.)

- During the operation, monitor the outdoor unit operation status and check for any incorrect wiring. (See figure 19)

Turn ON the power to the outdoor units and indoor units.	Make sure to turn ON the power 6 hours before starting the operation. This is necessary to warm the crankcase preliminarily by the electric heater.

Check the LED on the P-board (A1P) in the outdoor unit to see if the data transmission is performed normally.

Led display (Default status before delivery)		Micro-computer operation monitor HAP	Page H1P	Ready/ Error H2P	Individual H3P	Cooler/heater changeover Bulk (parent) H4P	Bulk (child) H5P	Low noise H6P	Demand H7P	Multi H8P
One outdoor unit installed		◑	●	●	○	●	●	●	●	●
When multiple outdoor unit installed (*)	Master station	◑	●	●	○	●	●	●	●	○
	Sub station 1	◑	●	●	●	●	●	●	●	◑
	Sub station 2	◑	●	●	●	●	●	●	●	●

LED display: ● OFF ○ ON ◑ Blinking

(*) The base (parent) unit is the outdoor unit to which the interconnecting wiring for the indoor units is connected. The other outdoor units are child units.

• As necessary, configure the system settings on-site by using the dipswitch (DS1) on the outdoor unit P-board (A1P) and push button switches (BS1~5). • When the system is in the multiple-outdoor unit configuration (Out Multi), perform the configuration on the parent unit. (Any settings made on a child unit will be ignored.)	Always perform configuration after turning ON the power. To learn the setting method, refer to the [Service precautions] label attached at the position shown in figure 19 (Electric box lid in outdoor unit). (Remember, the actual settings you have made must be recorded on the [Service Precautions] label.)
Check if the stop valves are in appropriate status and correct any wrong status. (Refer to the table in "6.6. Additional refrigerant charge" on page 10.)	**CAUTION** Do not leave any stop valve closed. Otherwise the compressor will fail.
Perform the check operation following the instructions printed on the [Service Precaution] label.	The system operates for about 15 minutes (30 minutes at maximum) and automatically stops the test operation. The system can start a normal operation about 15 minutes after the test operation, only if the remote controller displays no error codes.

1 Electric box lid

2 Location of the service precautions label

3 Location of the caution label

<Cautions for check operation>

- If the system is started within about 12 minutes after the outdoor/indoor units are turned ON, the compressor will not run and H2P lights up. Before starting an operation, always verify that the LED display shows the contents of the table in "8.2. Test run" on page 16.
- The system may require up to 10 minutes until it can start the compressor after an operation start. This is a normal operation to equalize the refrigerant distribution.
- The check operation does not provide any means of checking the indoor units individually. For that purpose, perform normal operation using the remote controller after the check operation.

Remote controller displays an error:

Installation error	Malfunction code	Remedial action
The stop valve of an outdoor unit is left closed.	E3 E4 F3 UF	Check referring to the table in "6.6. Additional refrigerant charge" on page 11
The phases of the power to the outdoor units are reversed.	U1	Exchange two of the three phases (L1, L2, L3) to make a positive phase connection.
No power is supplied to an outdoor or indoor unit (including phase interruption).	U1 U4	Check if the power wiring for the outdoor units are connected correctly. (If the power wire is not connected to L2 phase, no malfunction display will appear and the compressor will not work.)
Incorrect interconnections between units	UF	Check if the refrigerant line piping and the unit wiring are consistent with each other.
Refrigerant overcharge	E3 F6 UF	Recalculate the required amount of refrigerant from the piping length and correct the refrigerant charge level by recovering any excessive refrigerant with a refrigerant recovery machine.
For the U-5~16MX3, the wiring is connected to the Q1/Q2 (Out Multi)	U7 UF	Remove the wiring from the Q1/Q2 (Out Multi).
Insufficient refrigerant	E4 F3	Check if the additional refrigerant charge has been finished correctly. Recalculate the required amount of refrigerant from the piping length and add an adequate amount of refrigerant.

Temperature adjustment operation confirmation

After the test run is over, operate the unit normally. (Heating is not possible if the outdoor temperature is 24°C or higher.)

- Make sure the indoor and outdoor units are operating normally (If a knocking sound can be heard in the liquid compression of the compressor, stop the unit immediately and then energize the heater for a sufficient length of time before restarting the operation.)
- Run each indoor unit one at a time and make sure the corresponding outdoor unit is also running.
- Check to see if cold (or hot) air is coming out of the indoor unit.
- Press the fan direction and fan strength buttons on the indoor unit to see if they operate properly.

<Cautions for normal operation check>

- Once stopping, the compressor will not restart in about 5 minutes even if the Run/Stop button of an indoor unit in the same system is pressed.
- When the system operation is stopped by the remote controller, the outdoor units may continue operating for further 5 minutes at maximum.
- If the system has not undergone any check operation by the test operation button since it was first installed, an error code “U3” is displayed. In this case, perform check operation referring to "8.2. Test run" on page 16.
- After the test run, when handing the unit over to the customer, make sure the electric box lid, the service lid, and the unit casing are all attached.

Disposal requirements

Dismantling of the unit, treatment of the refrigerant, oil and eventual other parts, should be done in accordance with the relevant local and national regulations.

9. Caution for refrigerant leaks

(Points to note in connection with refrigerant leaks.)

Introduction

The installer and system specialist shall secure safety against leakage according to local regulations or standards. The following standards may be applicable if local regulations are not available.

The Urban Multi System, like other air conditioning systems, uses R-410A as refrigerant. R-410A itself is an entirely safe non-toxic, non-combustible refrigerant. Nevertheless care must be taken to ensure that air conditioning facilities are installed in a room which is sufficiently large. This assures that the maximum concentration level of refrigerant gas is not exceeded, in the unlikely event of major leak in the system and this in accordance to the local applicable regulations and standards.

Maximum concentration level

The maximum charge of refrigerant and the calculation of the maximum concentration of refrigerant is directly related to the humanly occupied space in to which it could leak.

The unit of measurement of the concentration is kg/m^3 (the weight in kg of the refrigerant gas in 1 m^3 volume of the occupied space).

Compliance to the local applicable regulations and standards for the maximum allowable concentration level is required.

According to the appropriate European Standard, the maximum allowed concentration level of refrigerant to a humanly space for R-410A is limited to 0.44 kg/m^3.

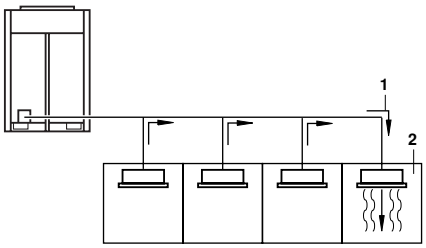

1 direction of the refrigerant flow

2 room where refrigerant leak has occurred (outflow of all the refrigerant from the system)

Pay special attention to places, such as a basements, etc. where refrigerant can stay, since refrigerant is heavier than air.

Procedure for checking maximum concentration

Check the maximum concentration level in accordance with steps 1 to 4 below and take whatever action is necessary to comply.

1 Calculate the amount of refrigerant (kg) charged to each system separately.

amount of refrigerant in a single unit system (amount of refrigerant with which the system is charged before leaving the factory) + additional charging amount (amount of refrigerant added locally in accordance with the length or diameter of the refrigerant piping) = total amount of refrigerant (kg) in the system

NOTE Where a single refrigerant facility is divided into 2 entirely independent refrigerant systems, use the amount of refrigerant with which each separate system is charged.

2 Calculate the smallest room volume (m^3)

In a case such as the following, calculate the volume of (A), (B) as a single room or as the smallest room.

A. Where there are no smaller room divisions

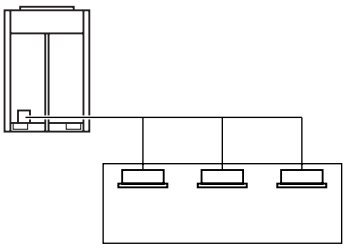

B. Where there is a room division but there is an opening between the rooms sufficiently large to permit a free flow of air back and forth.

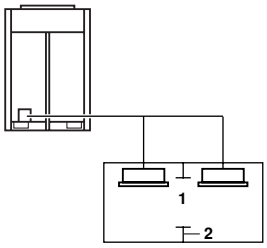

1 opening between rooms

2 partition

(Where there is an opening without a door or where there are openings above and below the door which are each equivalent in size to 0.15% or more of the floor area.)

3 Calculating the refrigerant density using the results of the calculations in steps 1 and 2 above.

$$\frac{\text{total volume of refrigerant in the refrigerant system}}{\text{size } (m^3) \text{ of smallest room in which there is an indoor unit installed}} \leq \text{maximum concentration level } (kg/m^3)$$

If the result of the above calculation exceeds the maximum concentration level then make similar calculations for the second then third smallest room and so until the result falls short of the maximum concentration.

4 Dealing with the situations where the result exceeds the maximum concentration level.

Where the installation of a facility results in a concentration in excess of the maximum concentration level then it will be necessary to revise the system.
Please consult your supplier.

NOTES

NOTES